Deadlocks

Introduction

- In a multiprogramming environment, several processes may compete for a finite number of resources. A process requests resources; if the resources are not available at that time, the process enters a waiting state.
  - Sometimes, a waiting process is never again able to change state, because the resources it has requested are held by other waiting processes. This situation is called a **deadlock**.

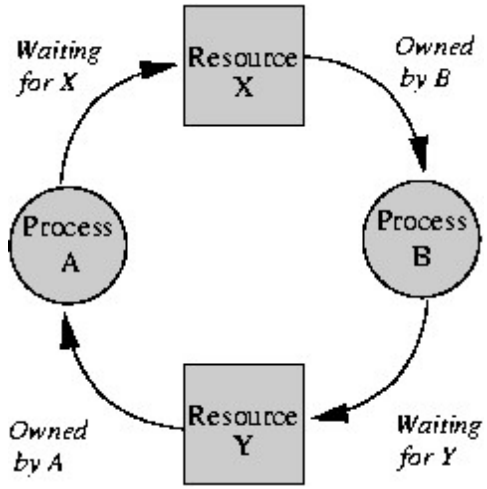

- Operating systems typically do not provide deadlock-prevention facilities, and it remains the responsibility of programmers to ensure that they design deadlock-free programs.

System Model

- System consists of resources
- Resource types $R_1, R_2, \ldots, R_m$

  CPU cycles, memory space, I/O devices
- Each resource type R_i has W_i instances.
- Each process utilizes a resource as follows:
  - **request**
  - **use**
  - **release**

Deadlock Characterization

- **Mutual exclusion:** only one process at a time can use a resource
- **Hold and wait:** a process holding at least one resource is waiting to acquire additional resources held by other processes
- **No preemption:** a resource can be released only voluntarily by the process holding it, after that process has completed its task
- **Circular wait:** there exists a set $\{P_0, P_1, \ldots, P_n\}$ of waiting processes such that P_0 is waiting for a resource that is held by P_1, P_1 is waiting for a resource that is held by P_2, …, P_{n-1} is waiting for a resource that is held by P_n, and P_n is waiting for a resource that is held by P_0.

Resource Allocation Graph

- Deadlocks can be described more precisely in terms of a directed graph called a **system resource-allocation graph**.

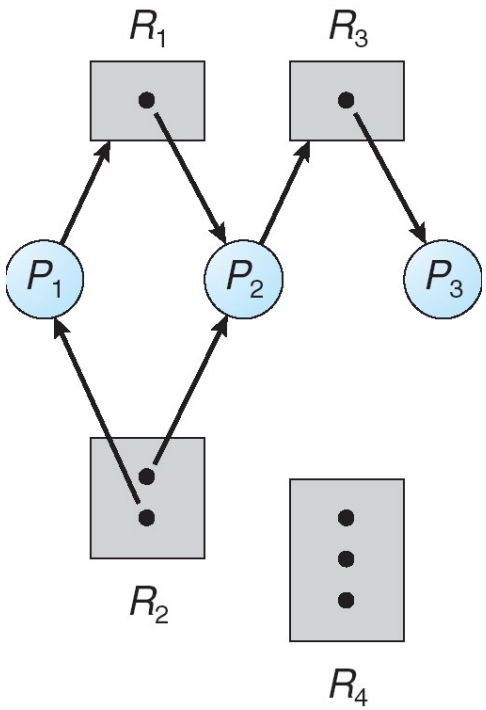

Examples

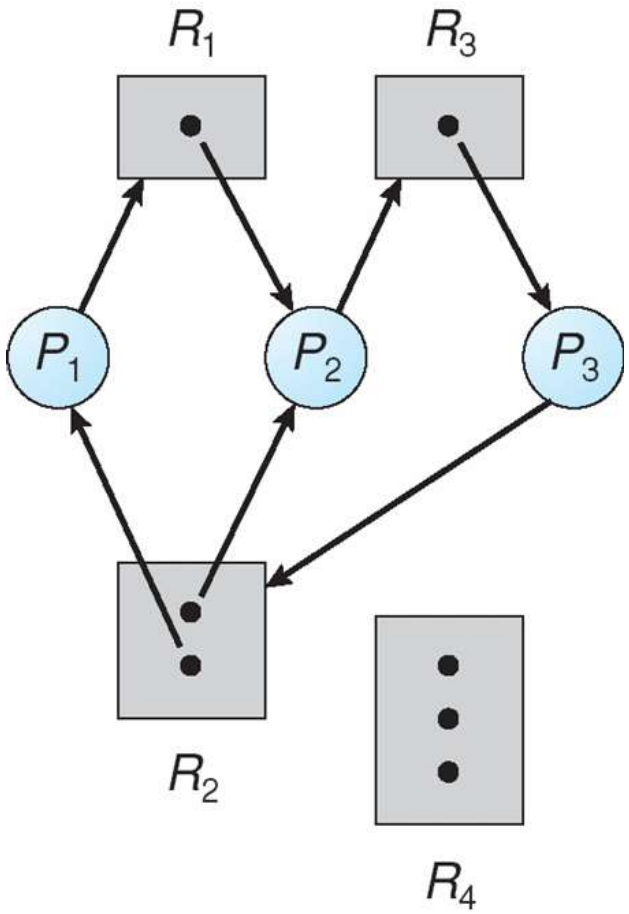

Resource Allocation Graph With A Deadlock

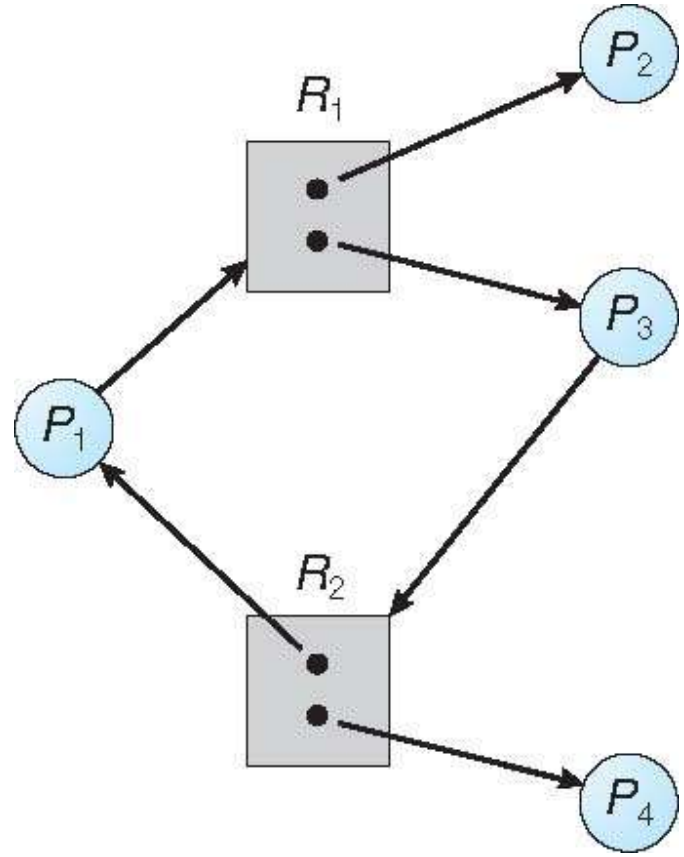

Resource Allocation Graph With No Deadlock

Methods of Handling Deadlocks

- Ensure that the system will ***never*** enter a deadlock state:
  - Deadlock prevention
  - Deadlock avoidance
- Allow the system to enter a deadlock state and then recover
- Ignore the problem and pretend that deadlocks never occur in the system; used by most operating systems, including UNIX, Windows

Deadlock Prevention

Restrain the ways request can be made

- **Mutual Exclusion** – not required for sharable resources (e.g., read-only files); must hold for non-sharable resources
- **Hold and Wait** – must guarantee that whenever a process requests a resource, it does not hold any other resources
  - Require process to request and be allocated all its resources before it begins execution, or allow process to request resources only when the process has none allocated to it.
- **No Preemption**
  - If a process that is holding some resources requests another resource that cannot be immediately allocated to it, then all resources currently being held are released
- **Circular Wait**
  - impose a total ordering of all resource types, and require that each process requests resources in an increasing order of enumeration

Deadlock Avoidance

- Requires that the system has some additional ***a priori*** information available
- Simplest and most useful model requires that each process declare the ***maximum number*** of resources of each type that it may need
- The deadlock-avoidance algorithm dynamically examines the resource-allocation state to ensure that there can never be a circular-wait condition

Safe, Unsafe, Deadlock State

- When a process requests an available resource, system must decide if immediate allocation leaves the system in a safe state
- System is in **safe state** if there exists a sequence $<P_1, P_2, \ldots, P_n>$ of ALL the processes in the systems such that for each P_i, the resources that P_i can still request can be satisfied by currently available resources + resources held by all the P_j, with $j < i$

  - ✓ If a system is in safe state ⇒ no deadlocks
  - ✓ If a system is in unsafe state ⇒ possibility of deadlock
  - ✓ Avoidance ⇒ ensure that a system will never enter an unsafe state.

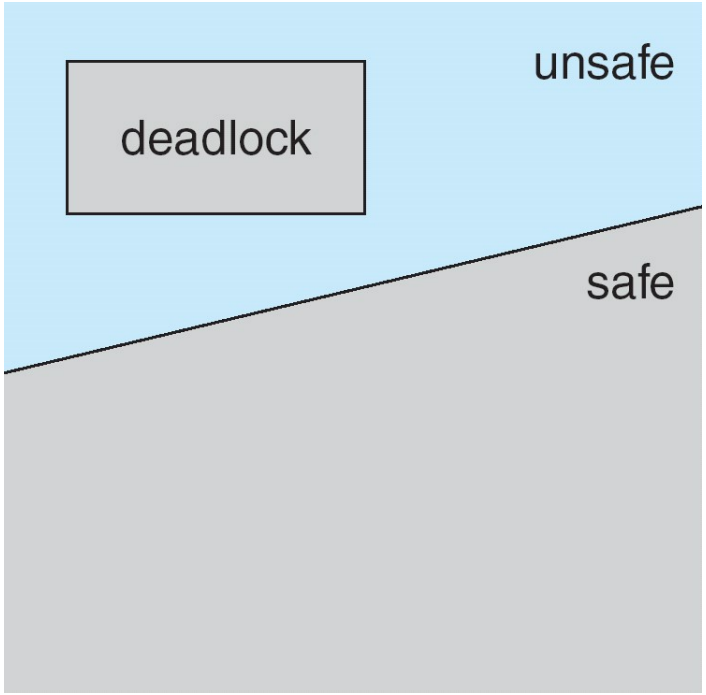

Avoidance Algorithms

- Single instance of a resource type
  - Use a resource-allocation graph
    - The request can be granted only if converting the request edge to an assignment edge does not result in the formation of a cycle in the resource allocation graph

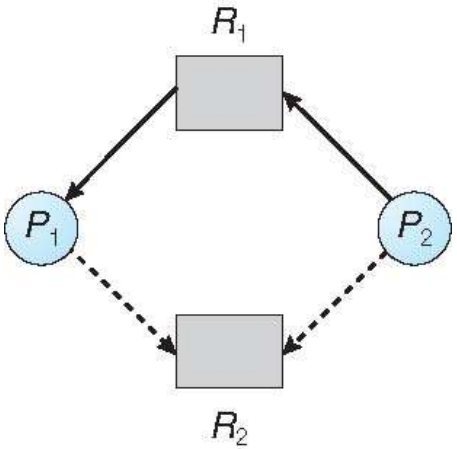

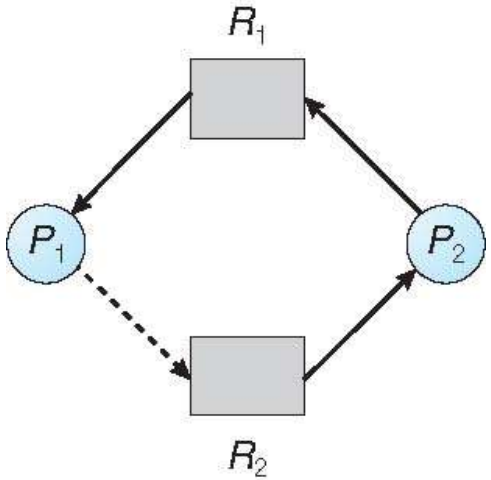

- Multiple instances of a resource type
  - Use the banker's algorithm

Banker's Algorithm

- Multiple instances
- Each process must a priori claim maximum use
- When a process requests a resource it may have to wait
- When a process gets all its resources it must return them in a finite amount of time

Data Structures for the Banker's Algorithm

Let n = number of processes, and m = number of resources types.

- **Available**: Vector of length m. If available $[j] = k$, there are k instances of resource type R_j available
- **Max**: n x m matrix. If *Max* $[i,j] = k$, then process P_i may request at most k instances of resource type R_j
- **Allocation**: n x m matrix. If Allocation$[i,j] = k$ then P_i is currently allocated k instances of R_j
- **Need**: n x m matrix. If *Need*$[i,j] = k$, then P_i may need k more instances of R_j to complete its task. Note that *Need* $[i,j] =$ *Max*$[i,j]$ – *Allocation* $[i,j]$

Safety Algorithm

1. Let ***Work*** and ***Finish*** be vectors of length *m* and *n*, respectively. Initialize:

   Work = Available

   ***Finish* [*i*] = *false* for *i* = 0, 1, …, *n*- 1**

2. Find an ***i*** such that both:

   (a) ***Finish* [*i*] = *false***

   (b) $\boldsymbol{Need_i \leq Work}$

   If no such ***i*** exists, go to step 4

3. $\boldsymbol{Work = Work + Allocation_i}$

   Finish*[*i*] = *true

   go to step 2

4. If ***Finish* [*i*] == *true*** for all ***i***, then the system is in a safe state

Resource-Request Algorithm for Process P_i

Let $\boldsymbol{Request_i}$ = request vector for process P_i. If $\boldsymbol{Request_i}$ **[*j*]** = k then process P_i wants k instances of resource type R_j

1. If $\boldsymbol{Request_i} \leq \boldsymbol{Need_i}$ go to step 2. Otherwise, raise error condition, since process has exceeded its maximum claim
2. If $\boldsymbol{Request_i} \leq \boldsymbol{Available}$, go to step 3. Otherwise P_i must wait, since resources are not available
3. Pretend to allocate requested resources to P_i by modifying the state as follows:

   $\boldsymbol{Available = Available - Request_i;}$

   $\boldsymbol{Allocation_i = Allocation_i + Request_i;}$

   $\boldsymbol{Need_i = Need_i - Request_i;}$

   - If safe $\Rightarrow$ the resources are allocated to P_i
   - If unsafe $\Rightarrow$ P_i must wait, and the old resource-allocation state is restored

Deadlock Detection

- Allow system to enter deadlock state
- Detection algorithm
- Recovery scheme

Single Instance of Each Resource Type
Resource-Allocation Graph and Wait-for Graph

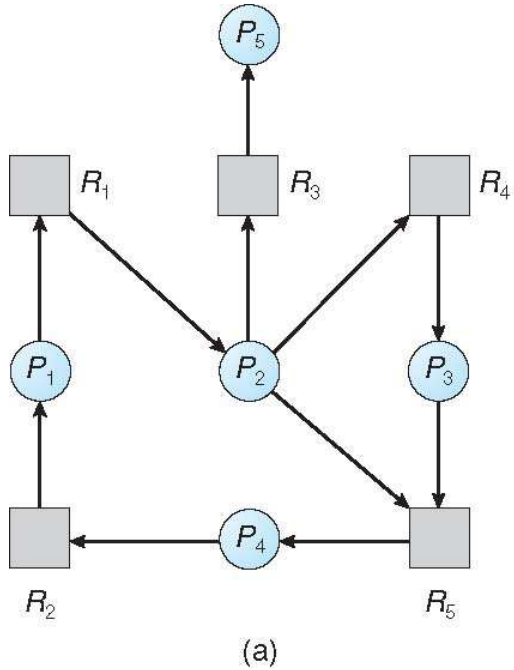

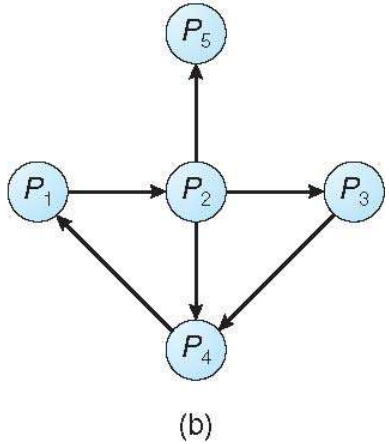

Resource-Allocation Graph

Corresponding wait-for graph

A deadlock exists, if and only if the wait-for graph contains a cycle.

Several Instances of a Resource Type

- **Available**: A vector of length ***m*** indicates the number of available resources of each type
- **Allocation**: An ***n*** **x** ***m*** matrix defines the number of resources of each type currently allocated to each process
- **Request**: An ***n*** **x** ***m*** matrix indicates the current request of each process. If ***Request*** **[*i*][*j*] = *k***, then process P_i is requesting ***k*** more instances of resource type R_j.

Detection Algorithm

1. Let ***Work*** and ***Finish*** be vectors of length ***m*** and ***n***, respectively Initialize:
   (a) ***Work*** = ***Available***
   (b) For $i = 1,2, \ldots, n$, if $Allocation_i \neq 0$, then
   Finish*[i]** = ***false; otherwise, ***Finish*[i]** = ***true***

2. Find an index ***i*** such that both:
   (a) ***Finish*[*i*]** == ***false***
   (b) $Request_i \leq Work$

   If no such ***i*** exists, go to step 4

3. $Work = Work + Allocation_i$
   Finish*[*i*]** = ***true
   go to step 2

4. If ***Finish[i]*** == ***false***, for some ***i***, $1 \leq i \leq n$, then the system is in deadlock state. Moreover, if ***Finish*[*i*]** == ***false***, then P_i is deadlocked

Algorithm requires an order of O(m x n^2) operations to detect whether the system is in deadlocked state

Recovery from Deadlock: Process Termination

- Abort all deadlocked processes
- Abort one process at a time until the deadlock cycle is eliminated
- In which order should we choose to abort?
  1. Priority of the process
  2. How long process has computed, and how much longer to completion
  3. Resources the process has used
  4. Resources process needs to complete
  5. How many processes will need to be terminated
  6. Is process interactive or batch?

Recovery from Deadlock: Resource Preemption

- **Selecting a victim** – minimize cost
- **Rollback** – return to some safe state, restart process for that state
- **Starvation** – same process may always be picked as victim, include number of rollback in cost factor

Reference

- "Operating System Concepts", Silberschatz, Galvin, Gagne, 9th Edition, Wiley India.